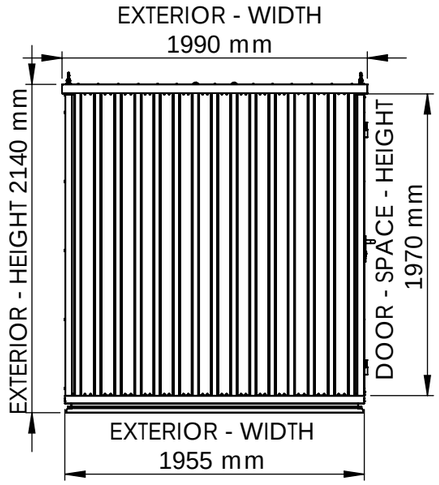

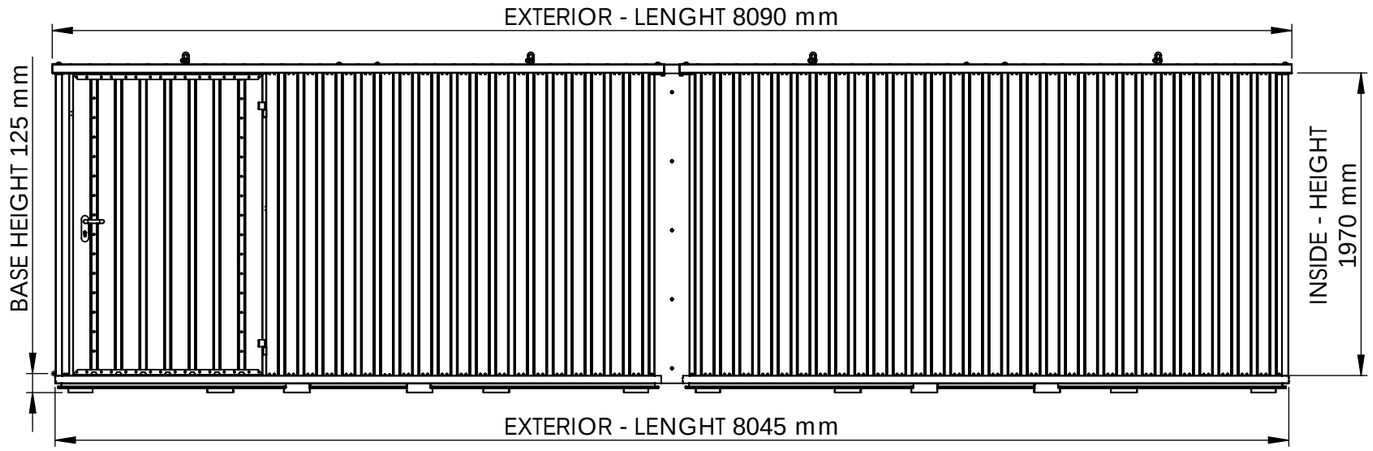

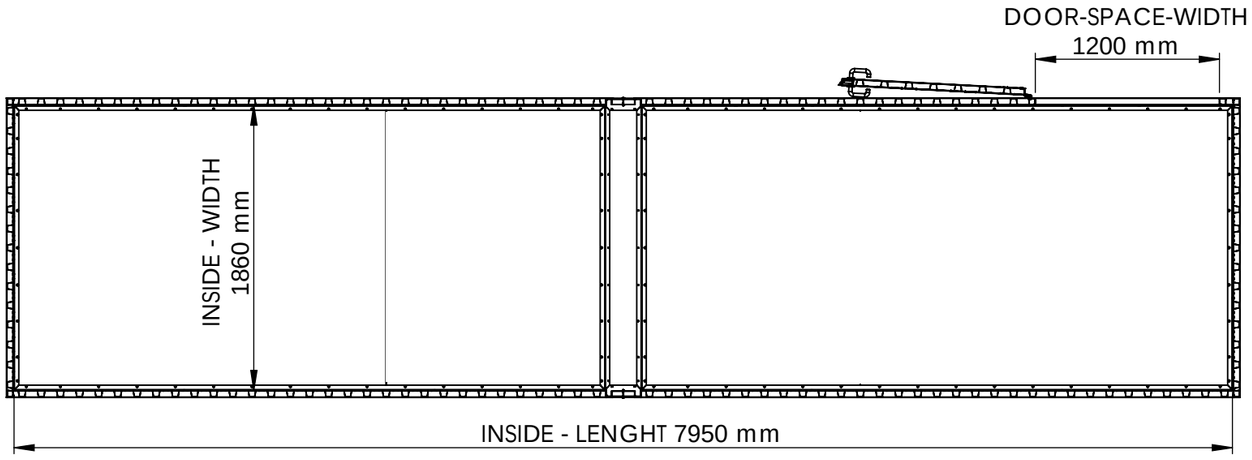

Product Code: 4040.110.450