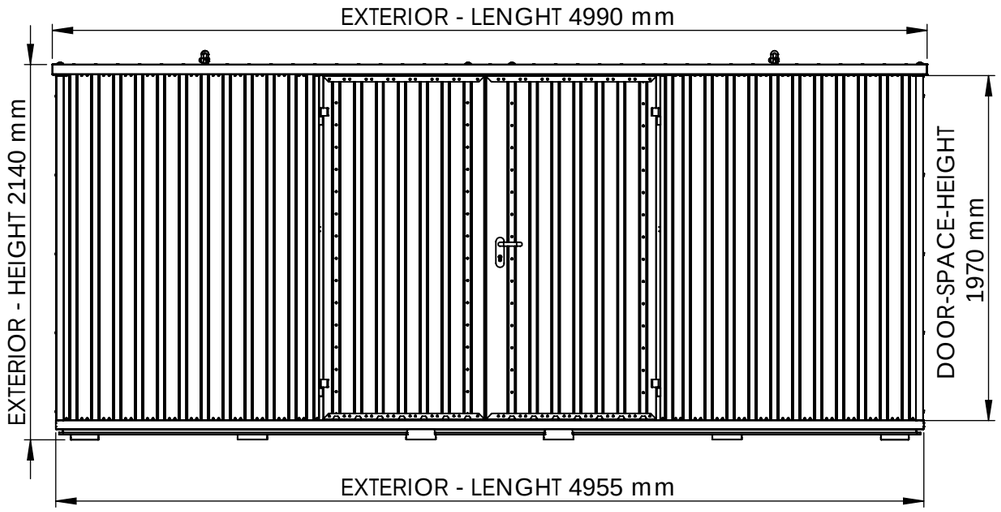

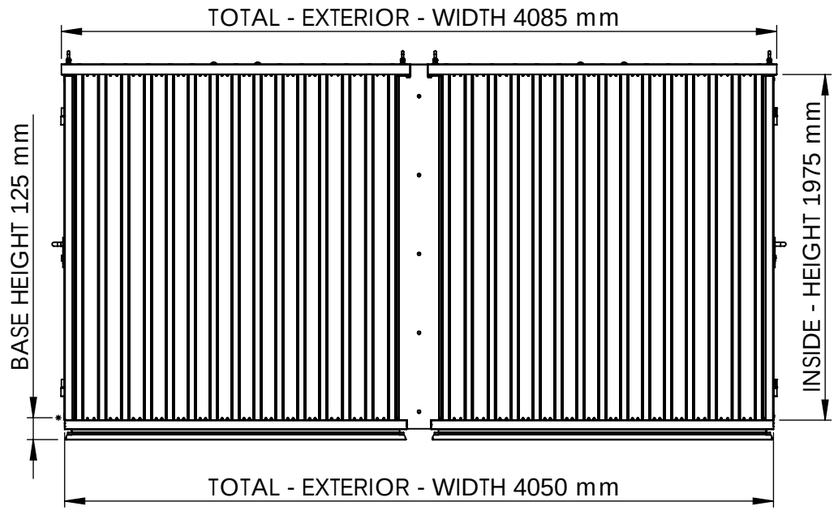

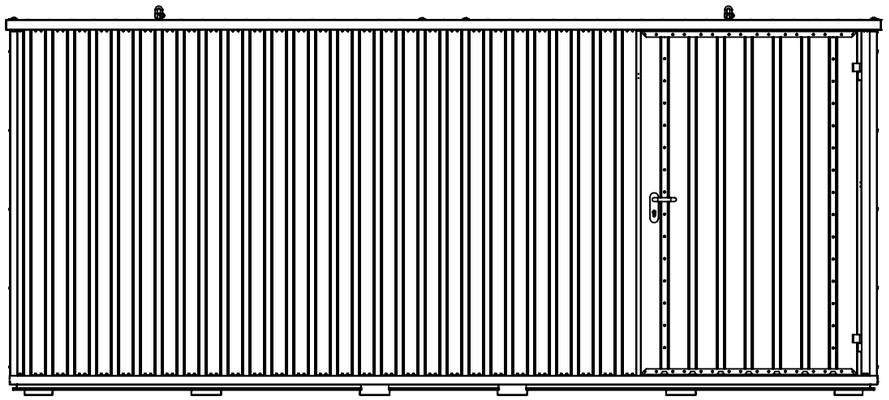

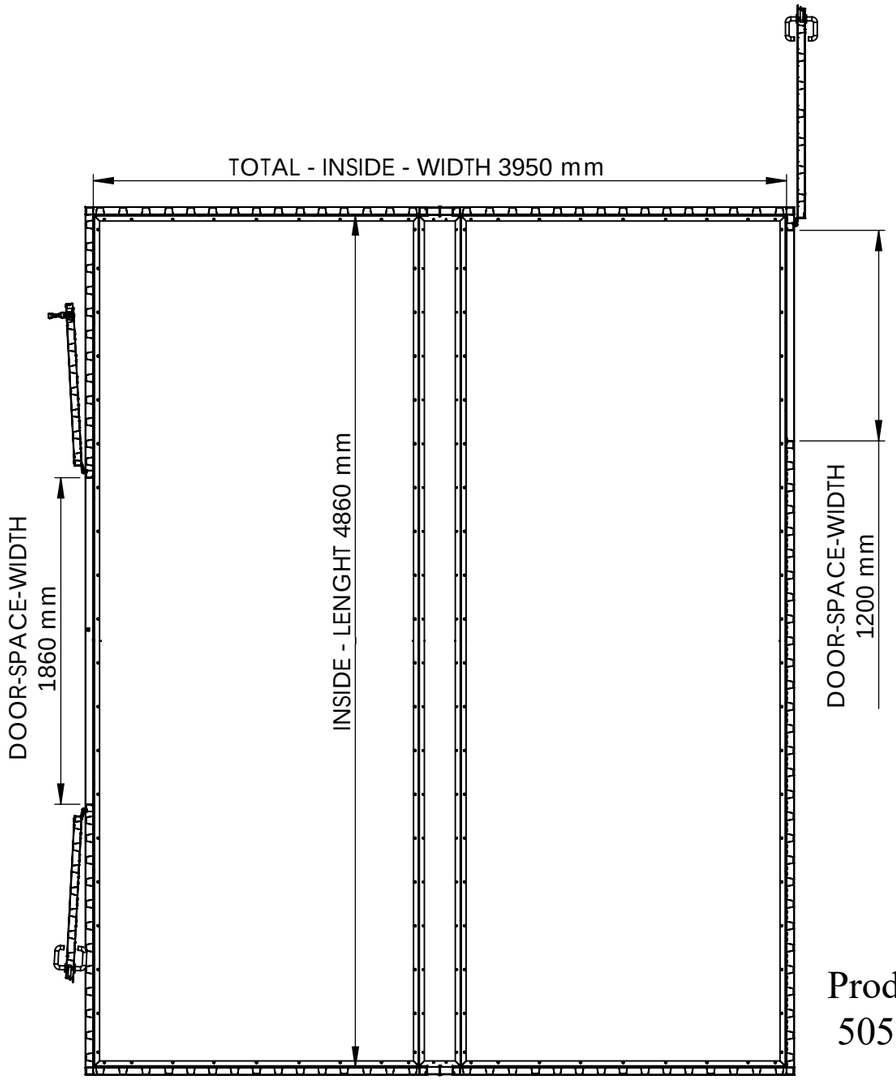

Product Code:
505.110.430.440