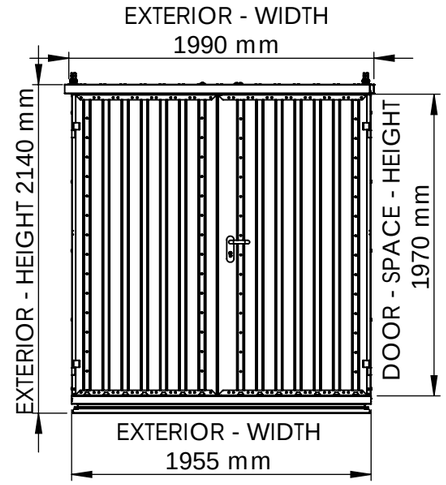

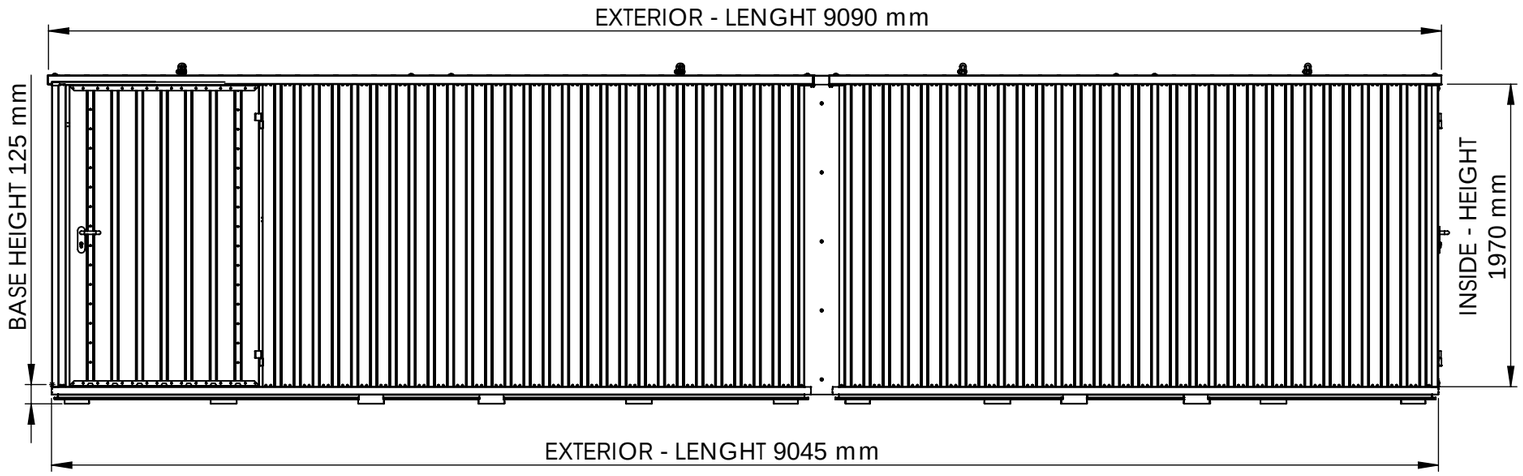

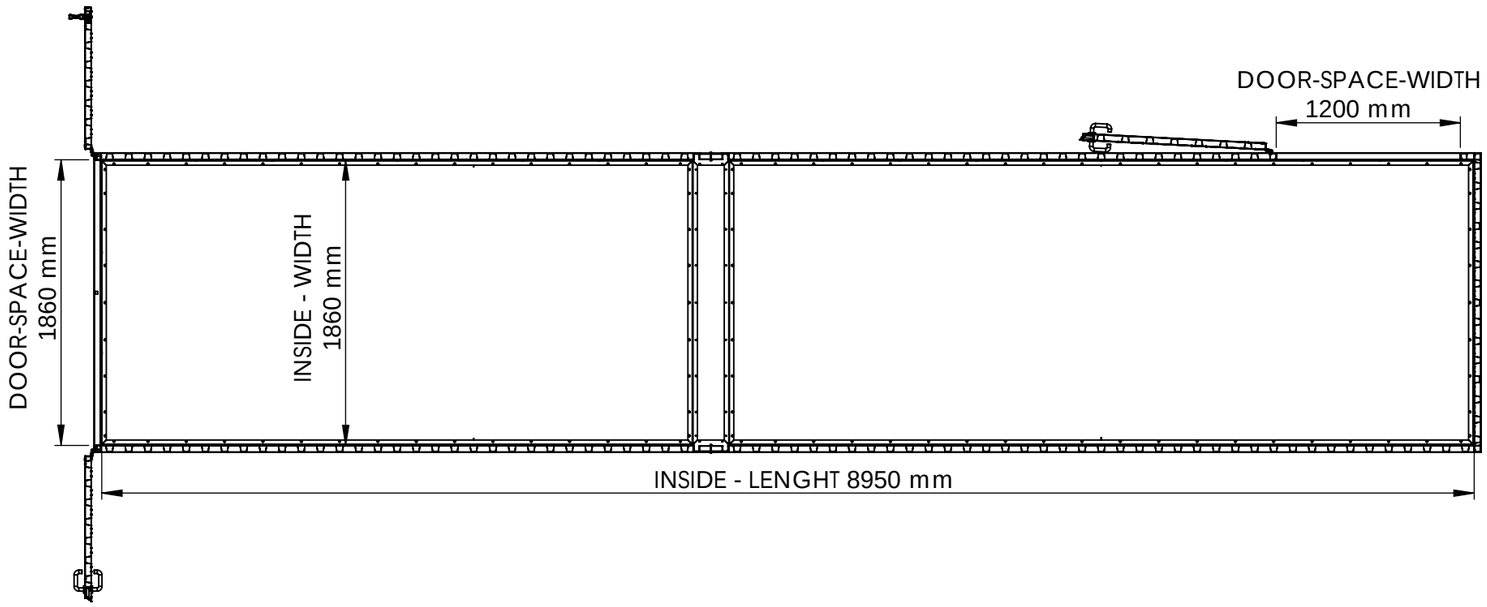

Product Code: 5040.110.450.330