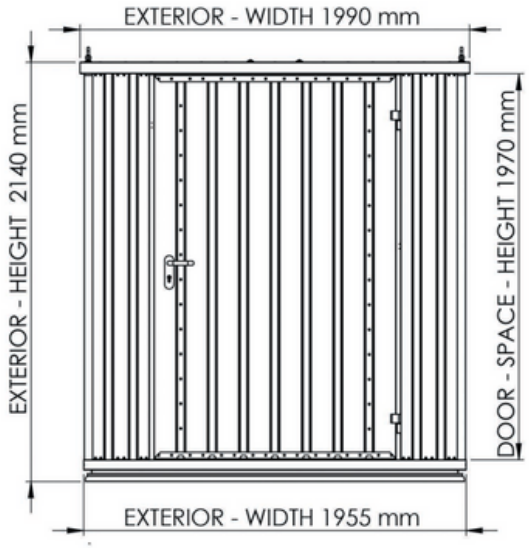

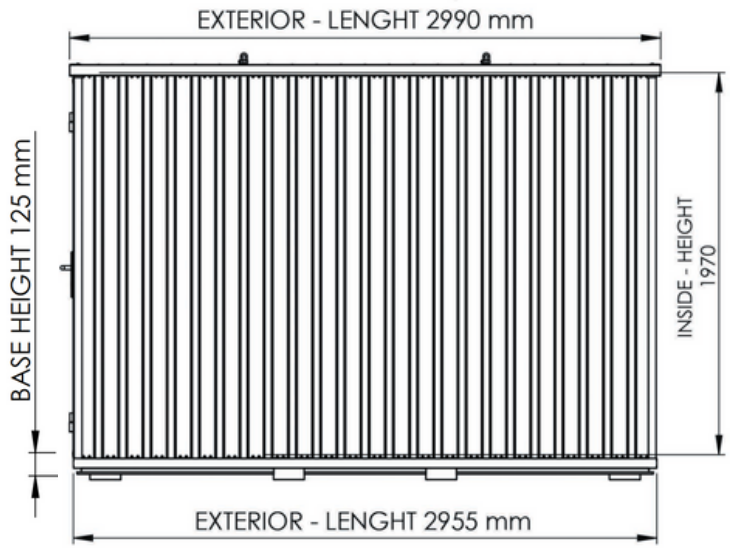

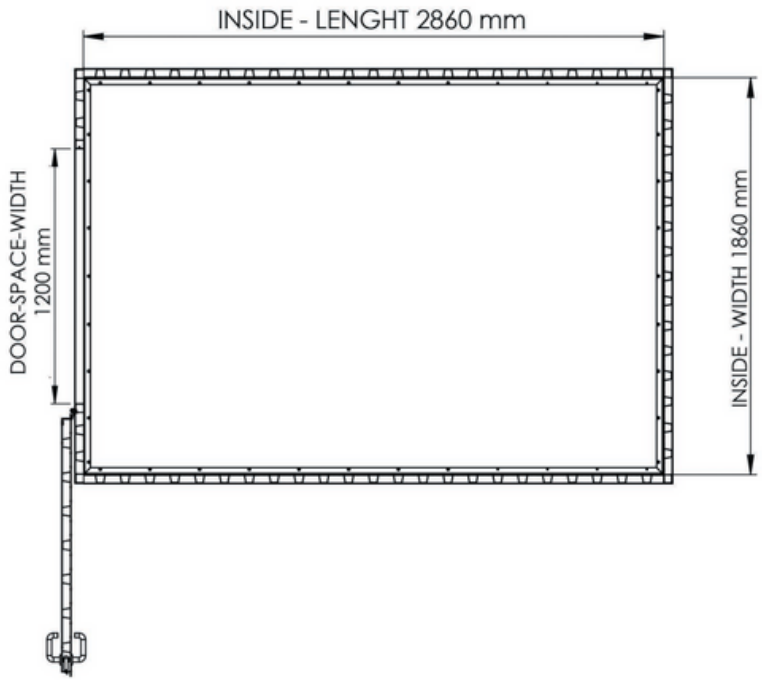

Product Code: 30.110.320