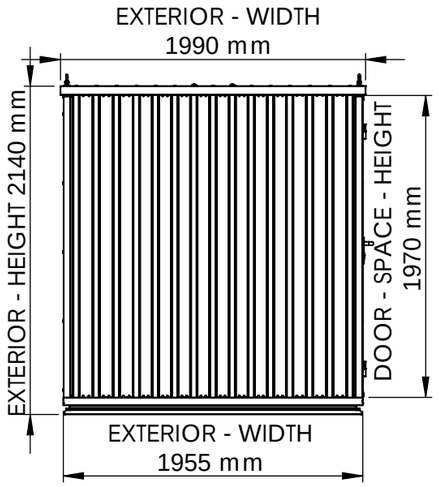

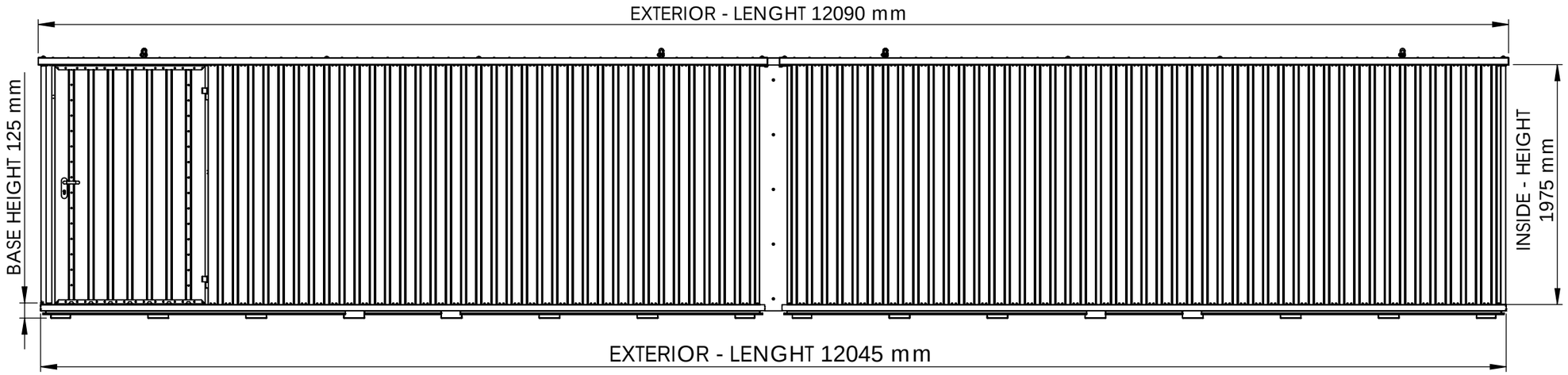

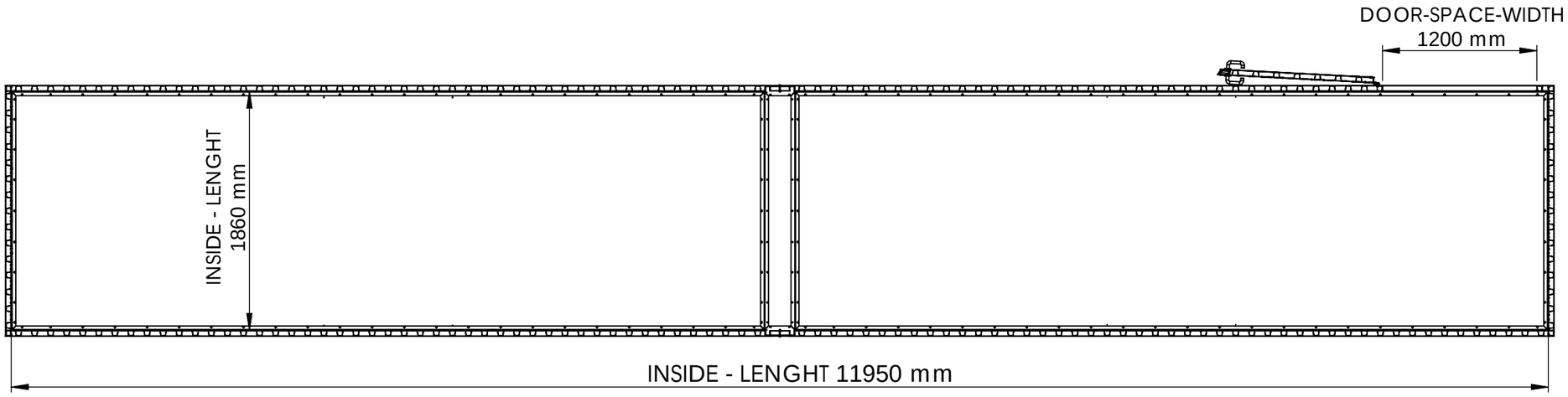

Product Code: 6060.110.450