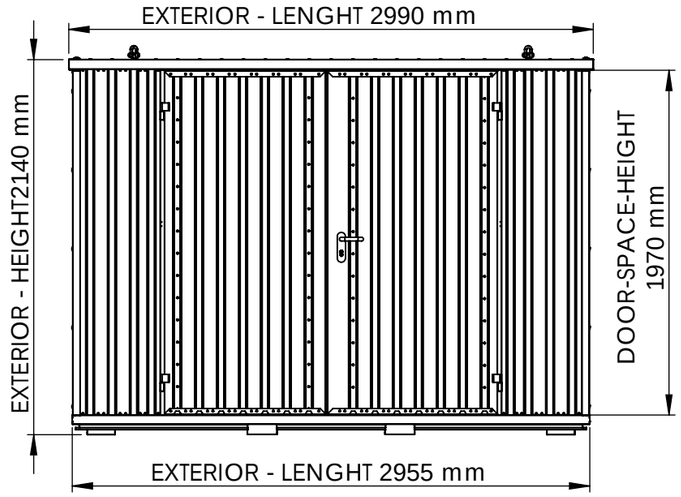

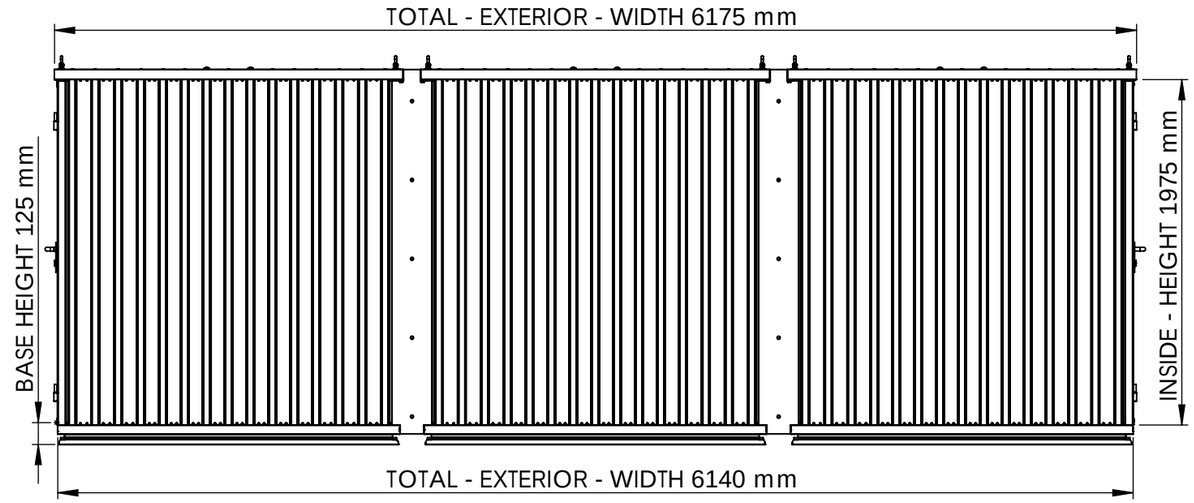

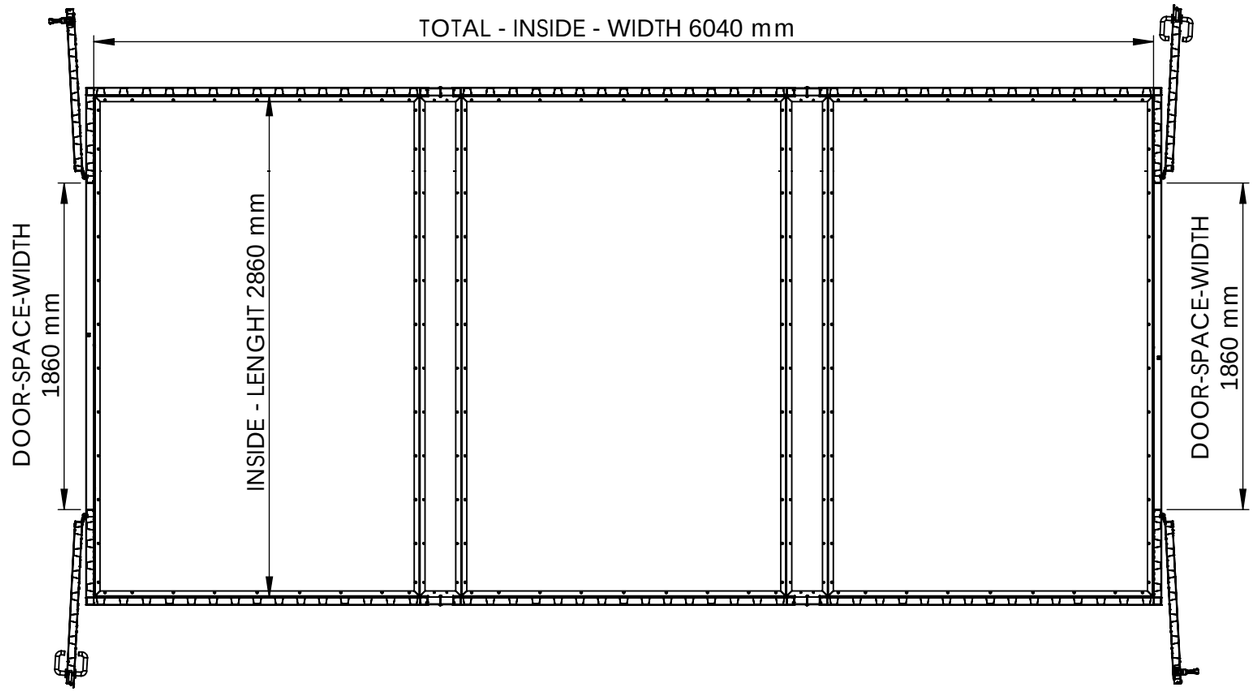

Product Code: 3033.110.430.431