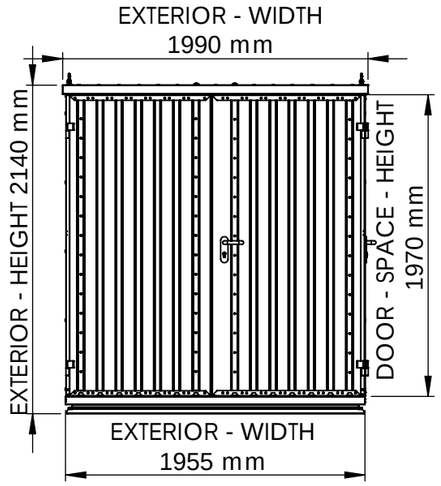

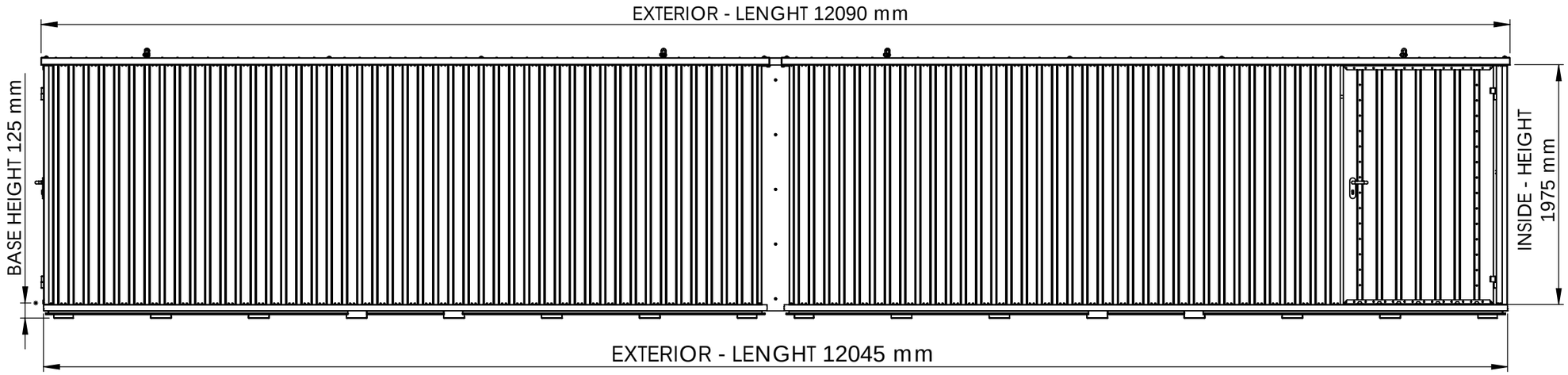

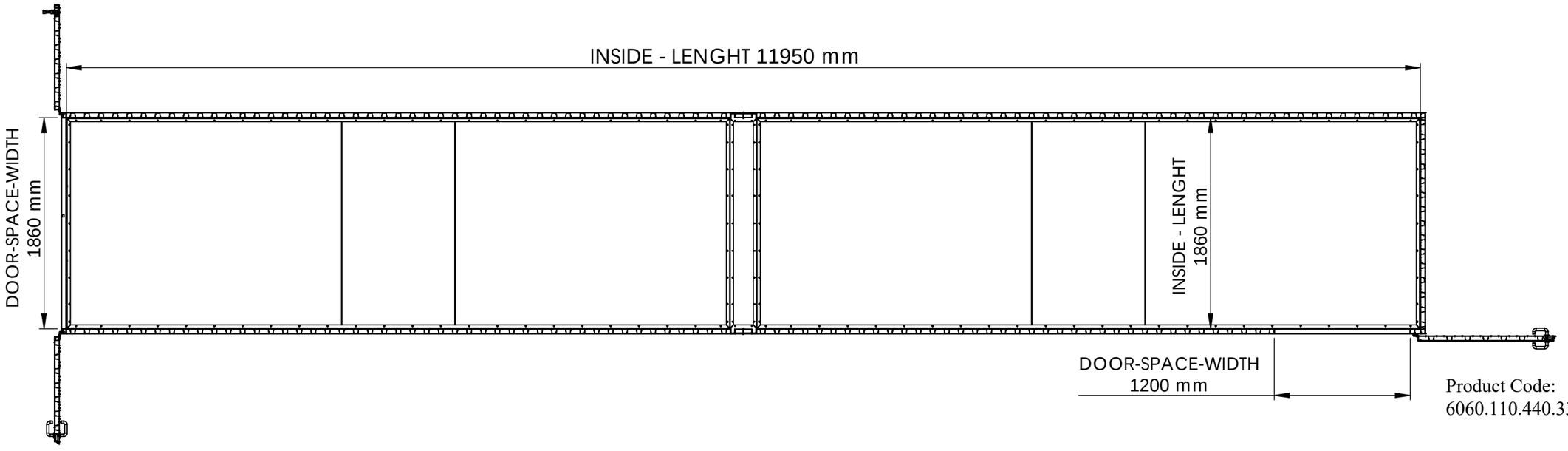

Product Code:
6060.110.440.330