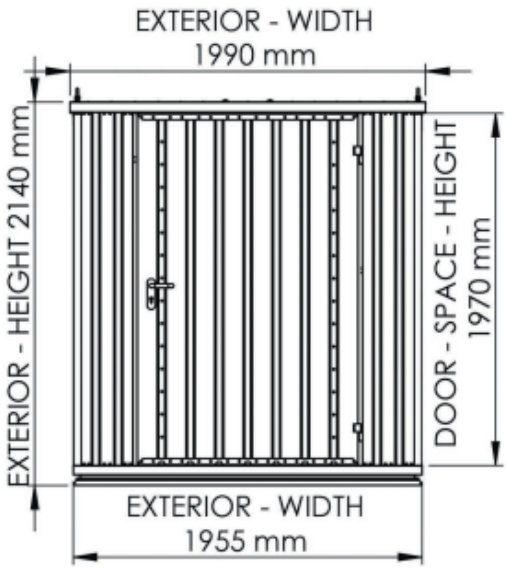

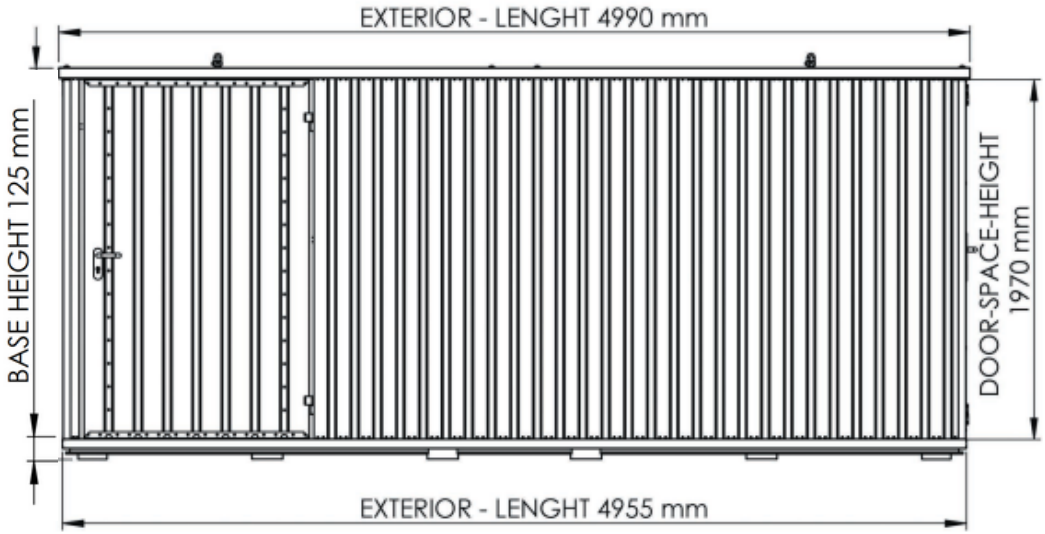

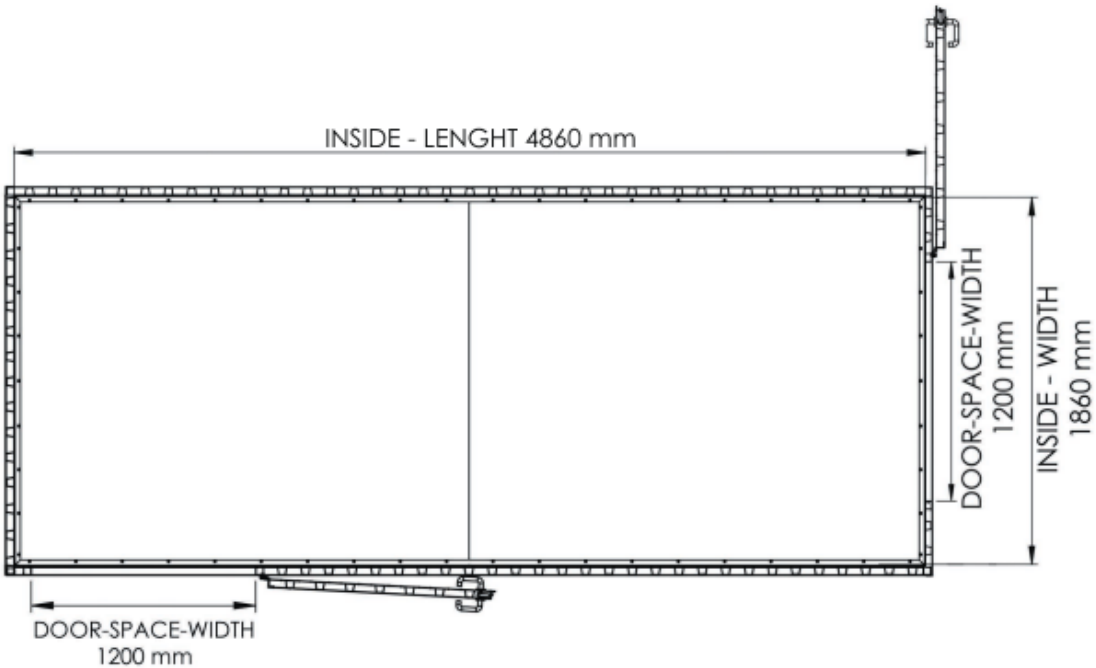

Product Code: 50.110.450.320