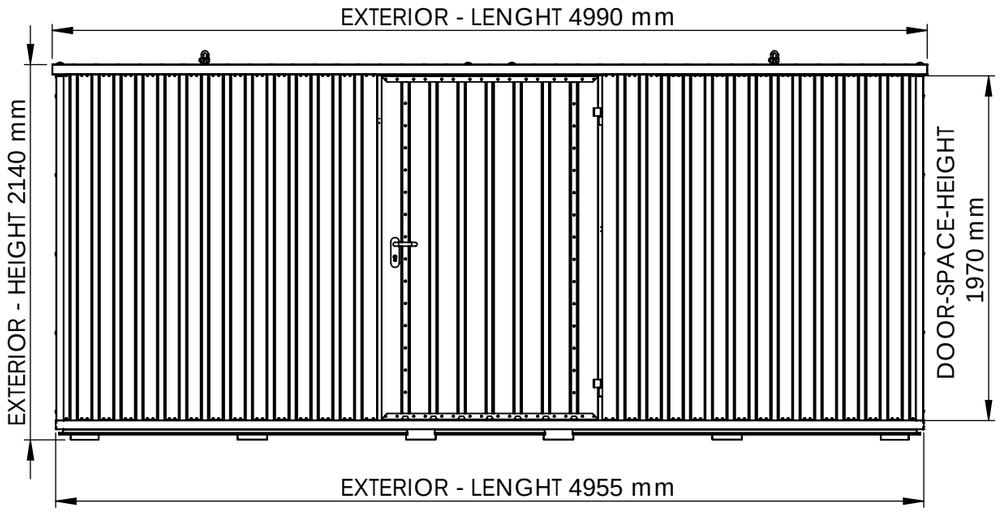


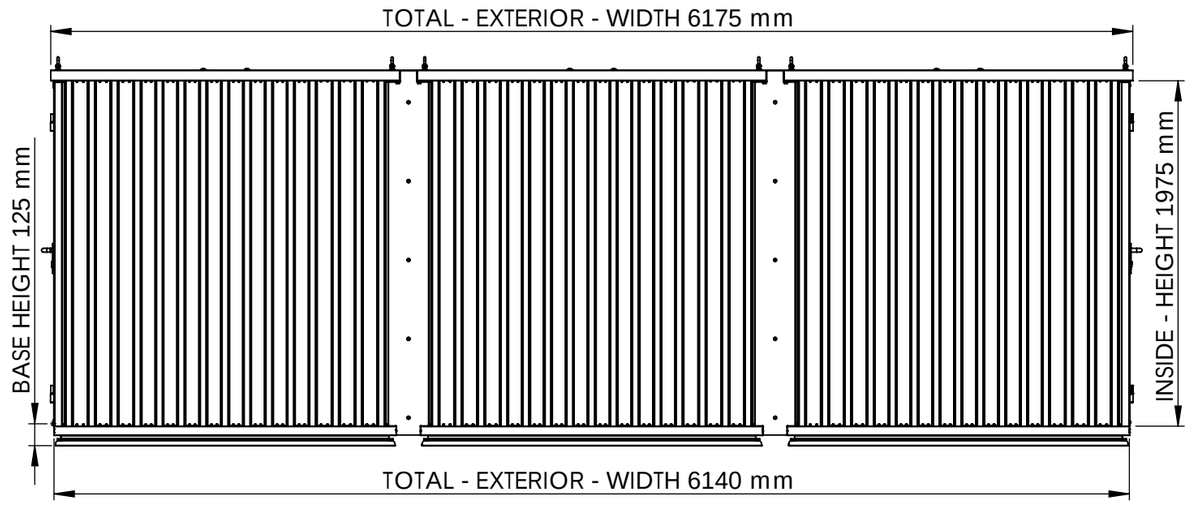


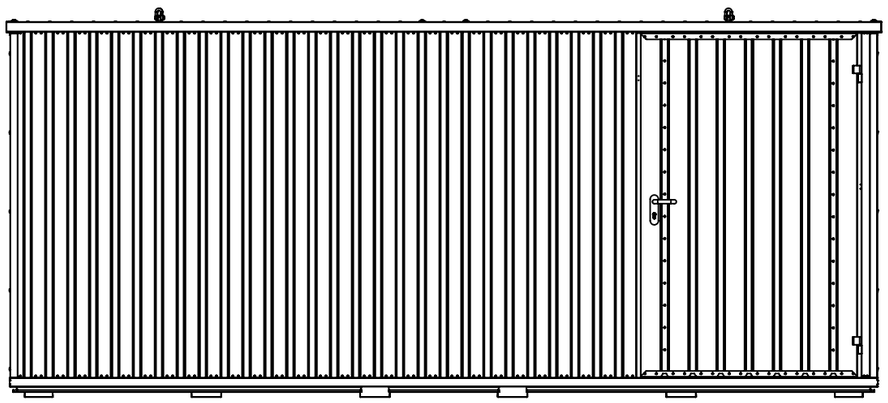

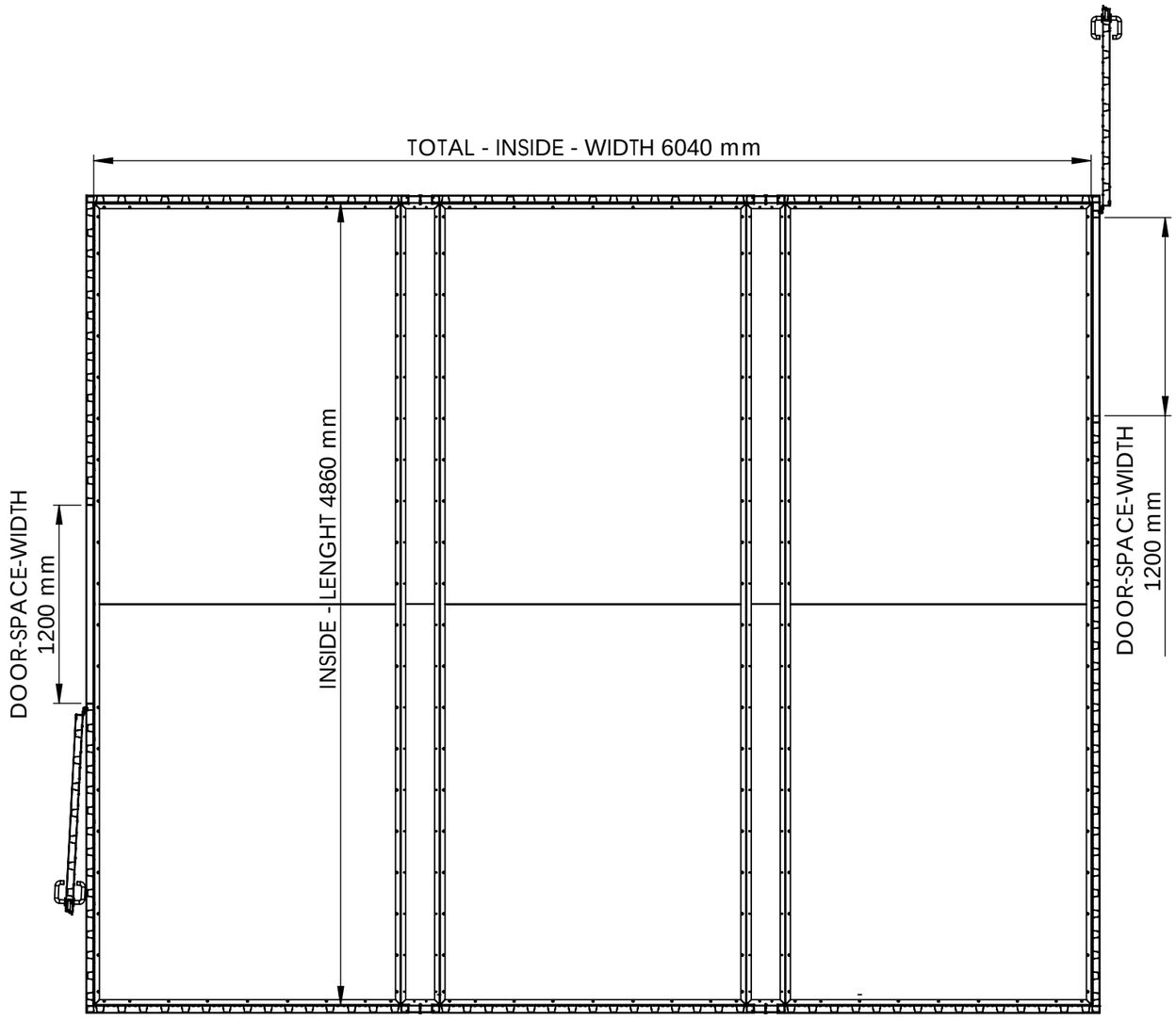


Product Code: 5055.110.420.440