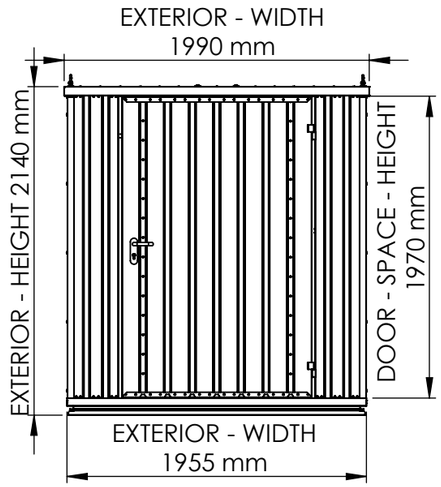

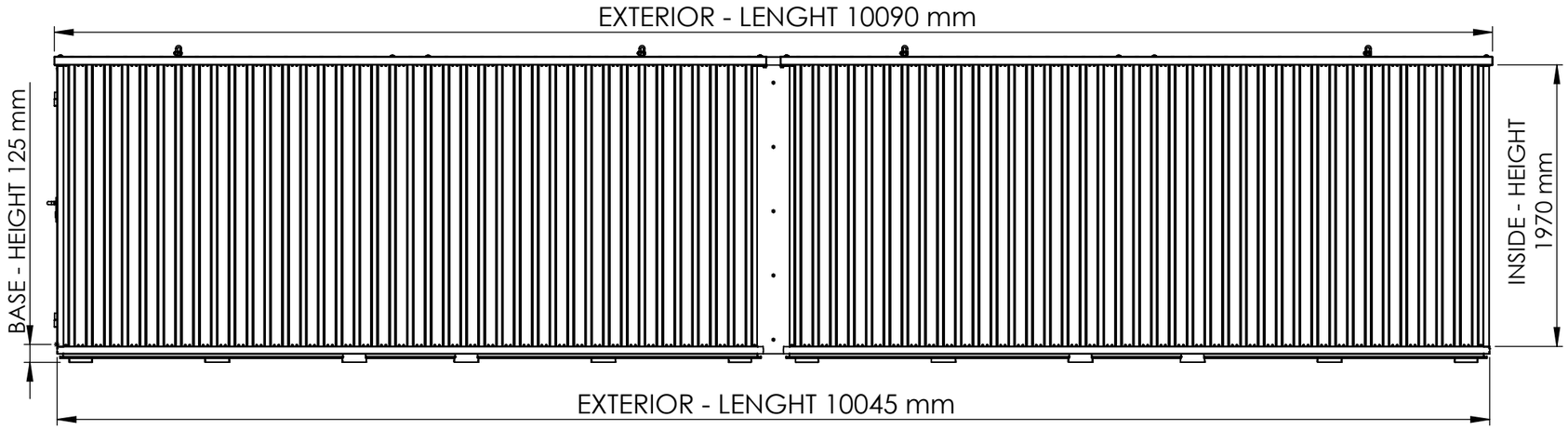

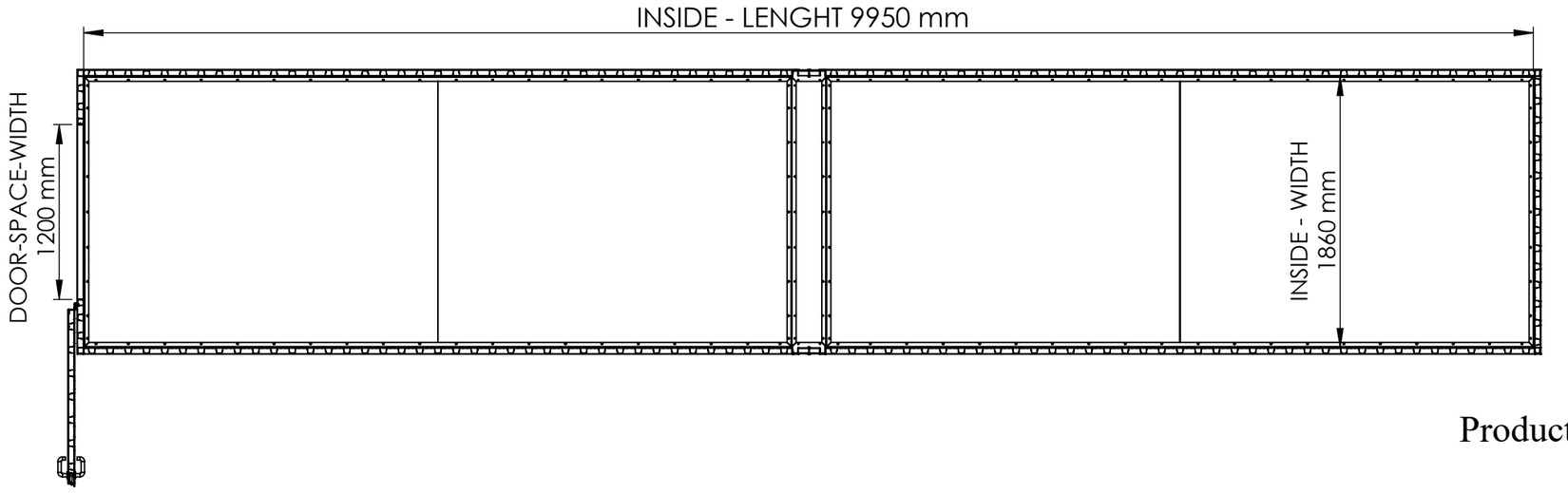

Product Code: 5050.110.320