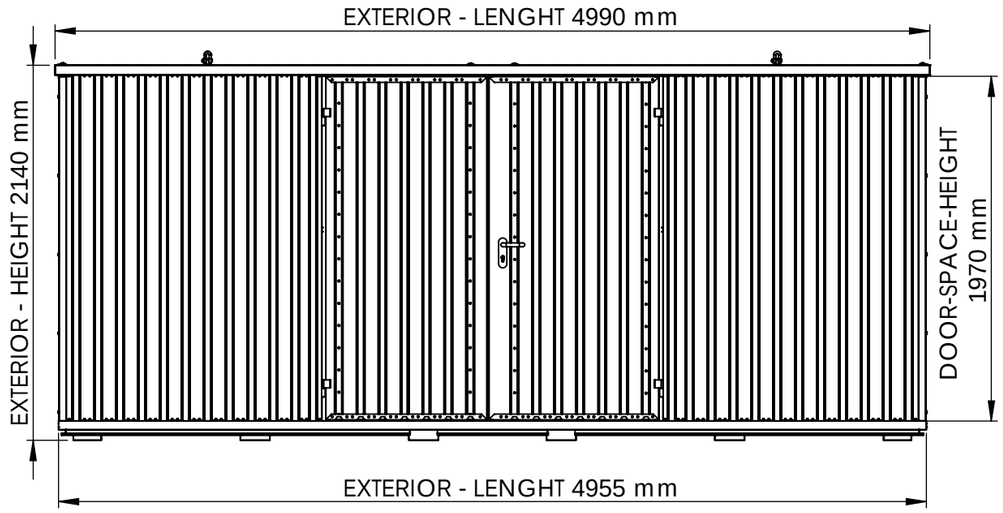

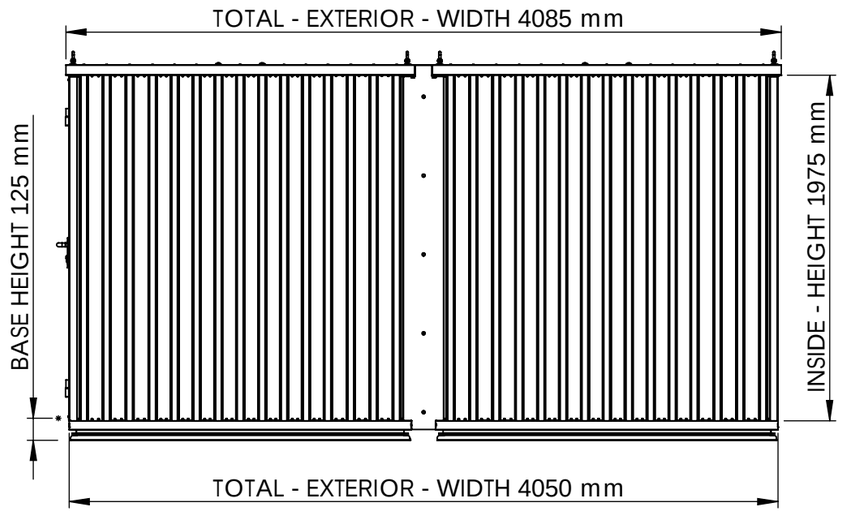

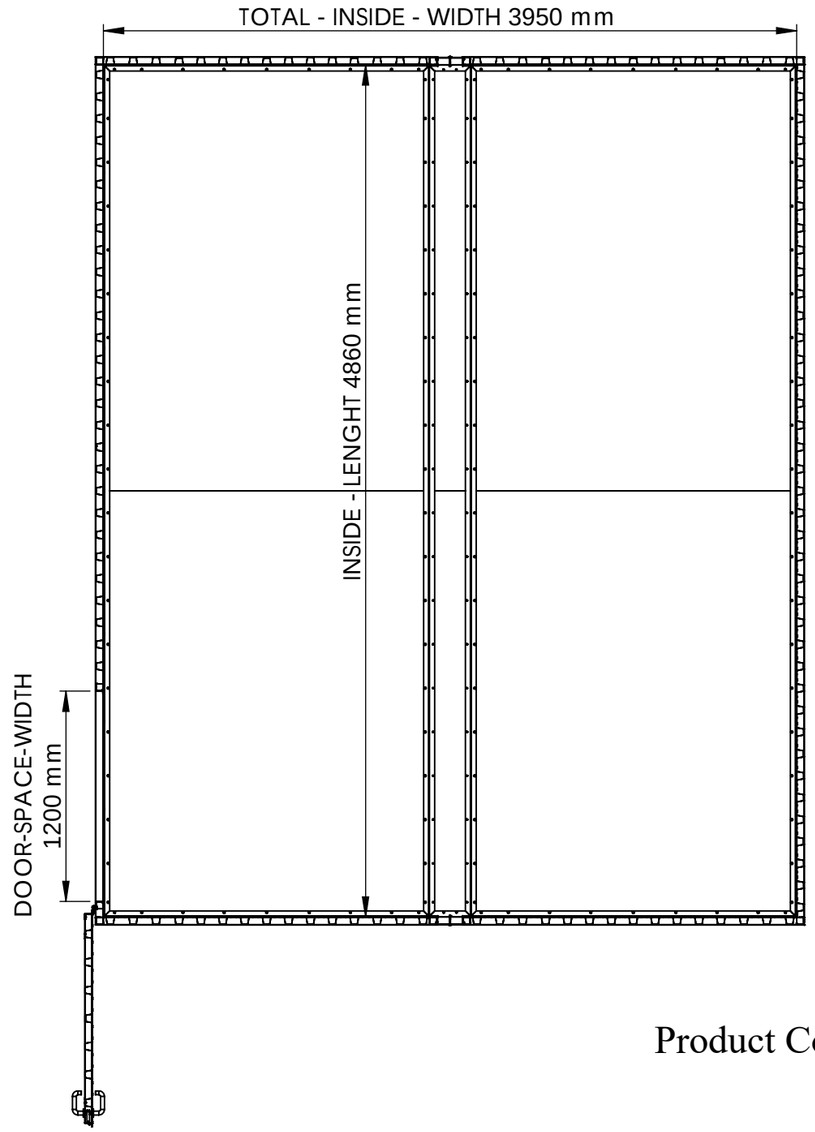

Product Code: 505.110.440