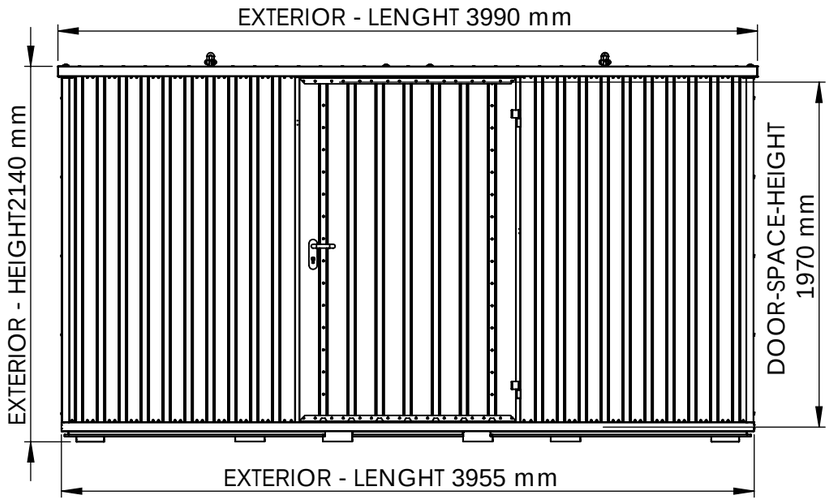

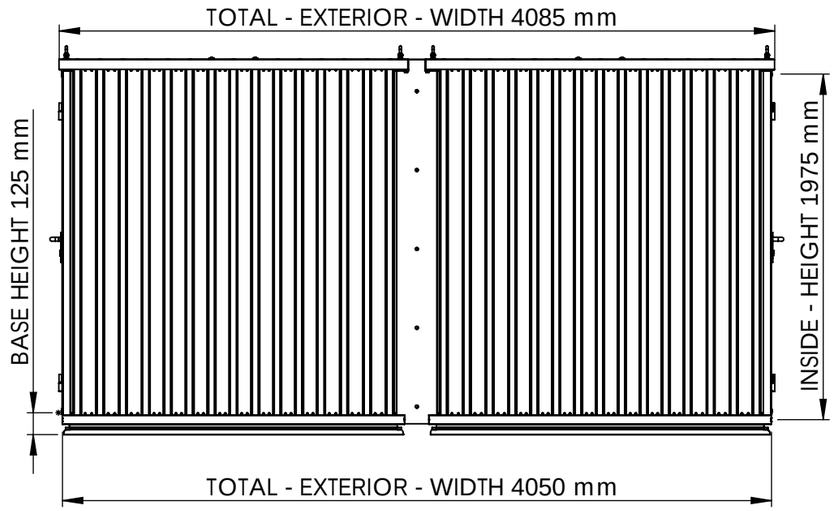

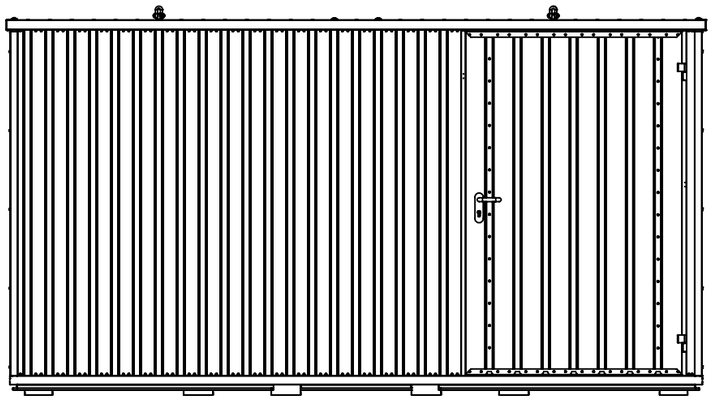

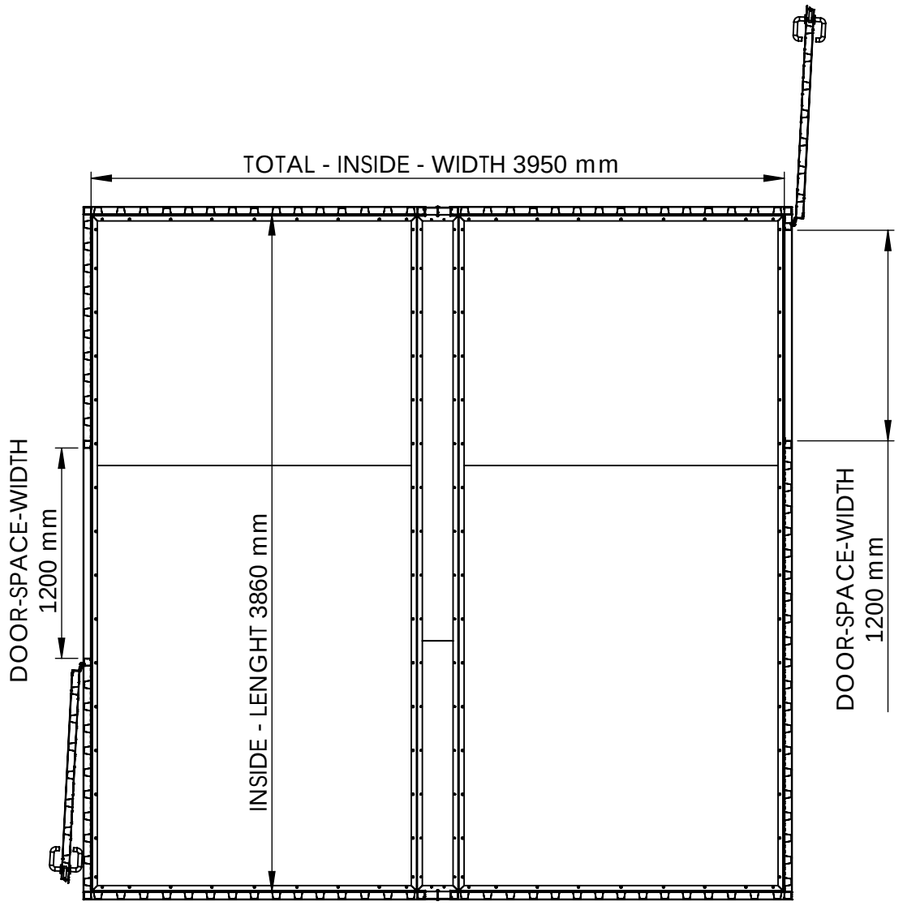

Product Code: 404.110.420.440