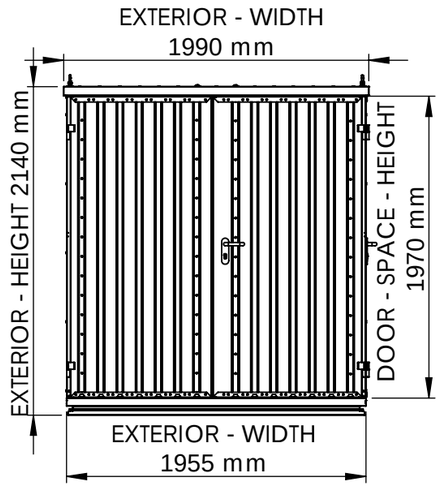

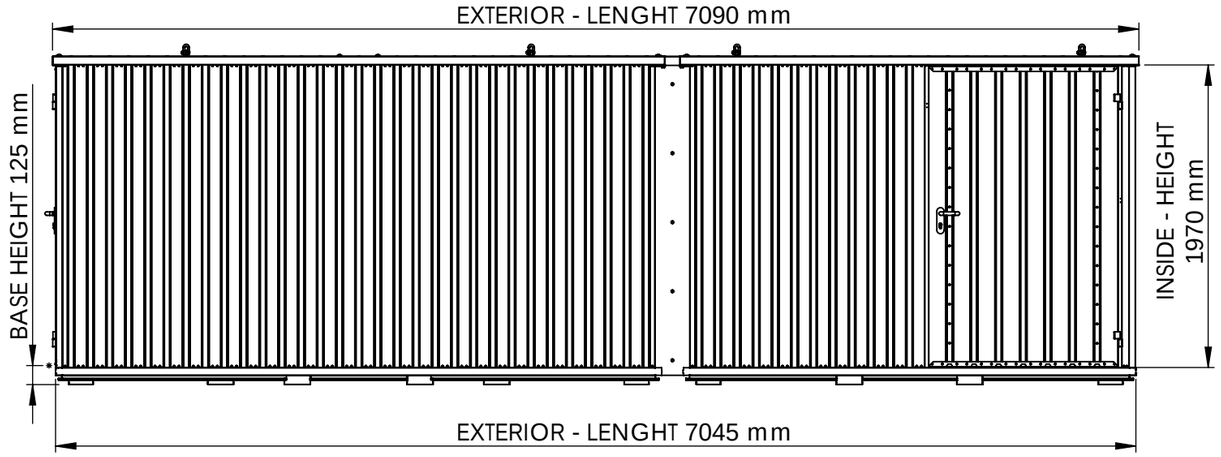

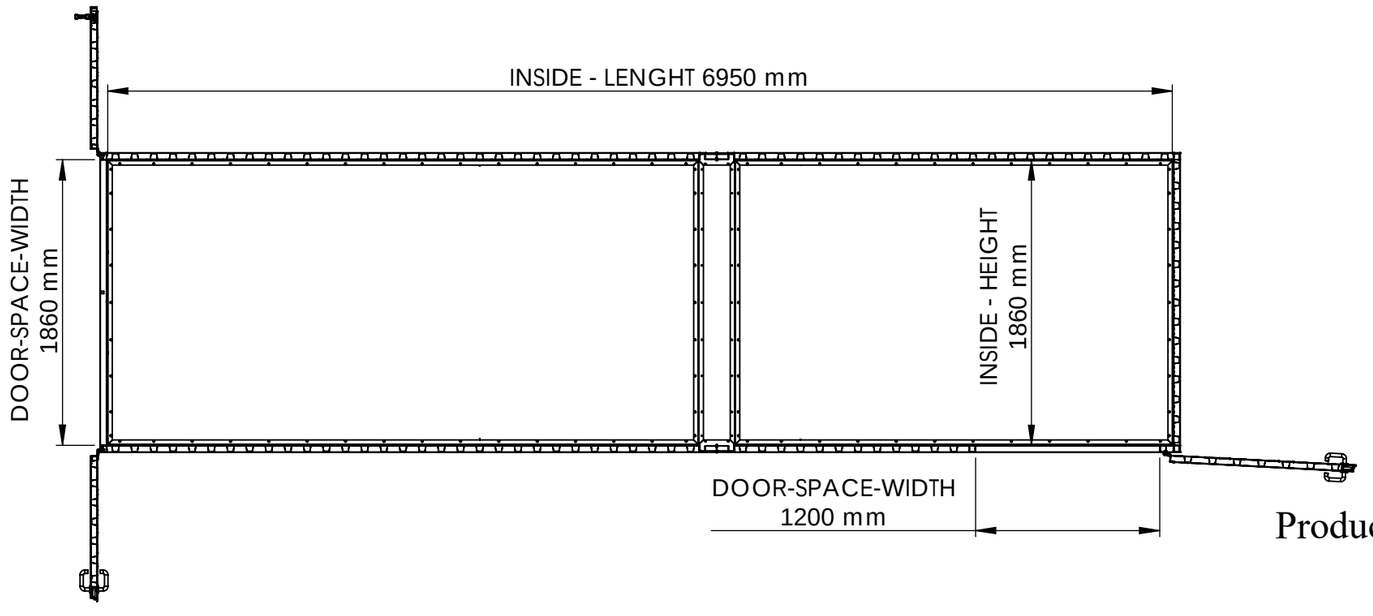

Product Code: 4030.110.440.330