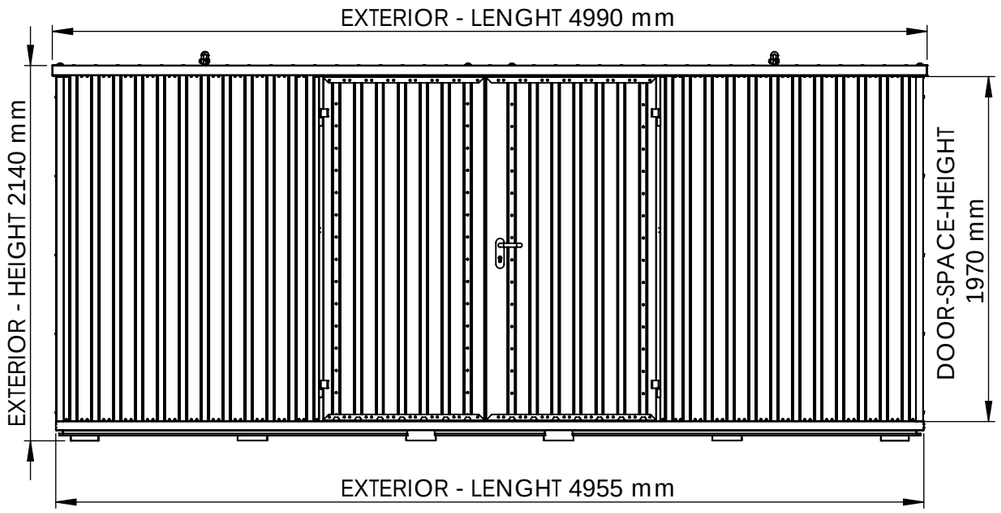

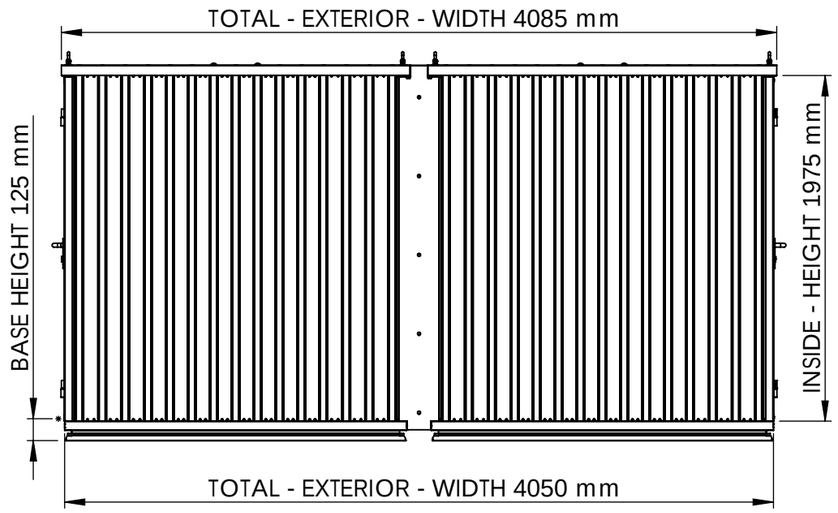

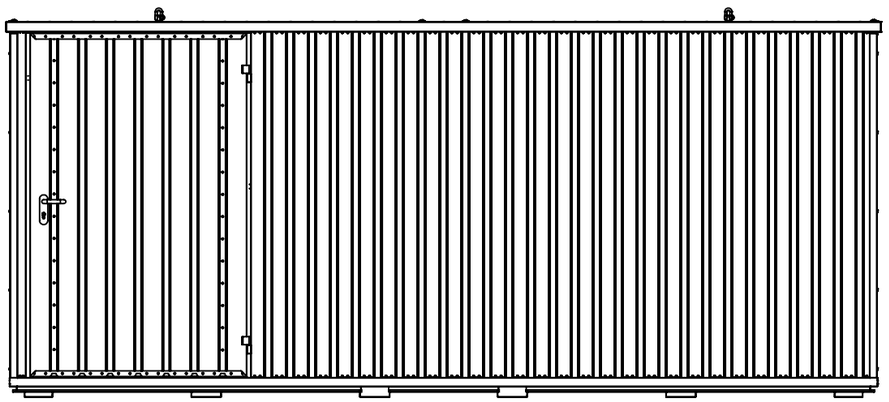

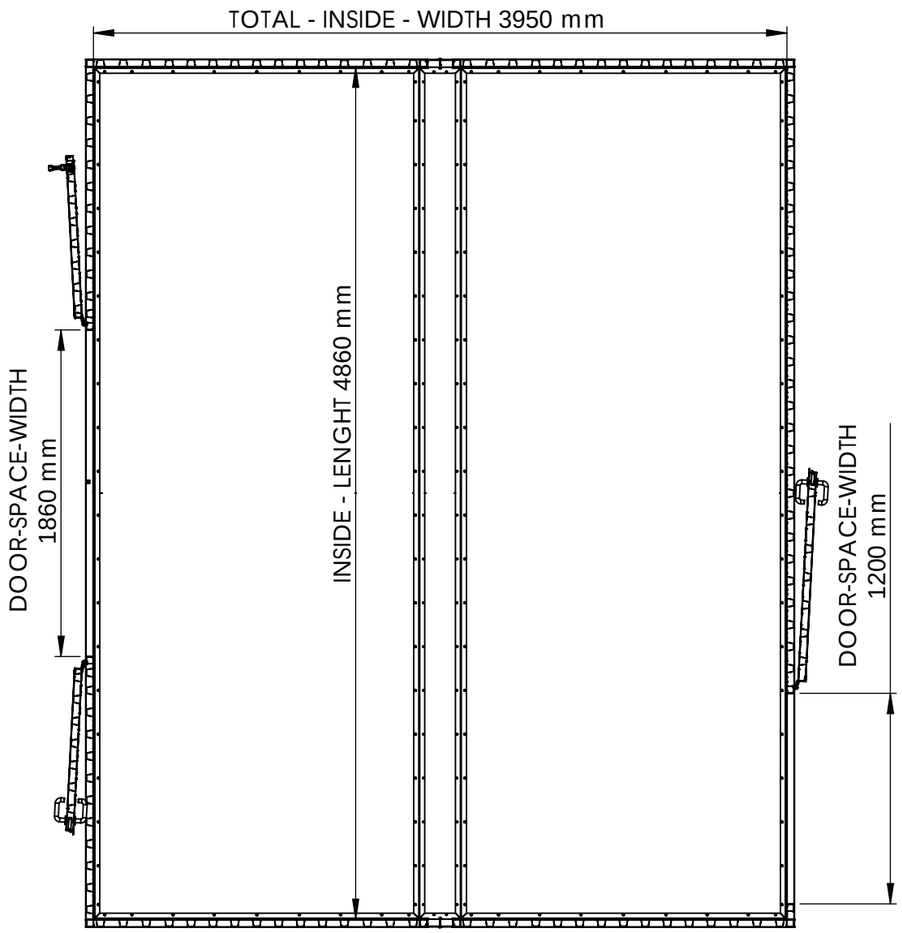

Product Code: 505.110.430.450